Lonos 1
Lonos 2
Lonos 3

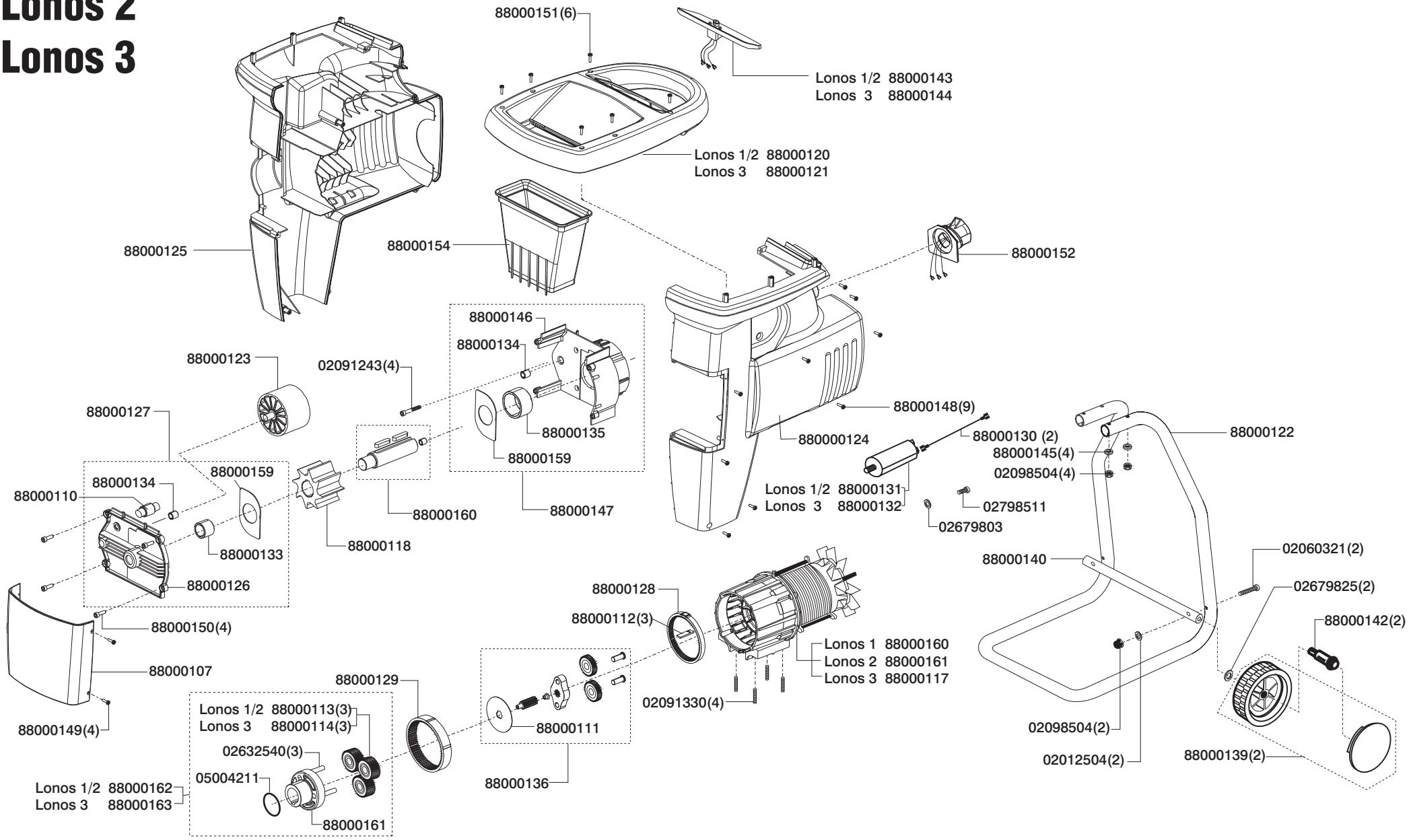

526299

a	b	c	d	e	f
07/97	07/97	09/97	05/00	01/01	06/03